Chapter 13A-24 – PARKING, ACCESS AND CIRCULATION REQUIREMENTS

13A-24-01 Purpose 1

13A-24-02 General Provisions 1
A. General
B. Parking Space Size
C. Floor Area Defined

13A-24-03 Special Access and Parking Provisions 4
A. Alternative to On-Site Parking
B. Parking Requirements Increase/Decrease
C. Shared Parking
D. Drive-Thru Business Stacking Space
E. Excessive Parking
F. Prohibited Parking

13A-24-04 Residential Parking Requirements and Restrictions 6
A. Vehicles Must Be Parked Upon a Hard Surface
B. Maximum Area
C. License and Registration Requirement for Vehicles Parked/Stored Outside
D. Carports, Vehicle Covers
E. Parking of Recreational Vehicles
F. Parking of Commercial Vehicles
G. Enforcement

13A-24-05 Parking Lots – Design Criteria 8
A. On-Site Parking Required
B. Parking Consolidation
C. Reciprocal Access
D. Minimum Parking Backout
E. Curb
F. Parking Lot Surface
G. Deviation to Surfacing Materials
H. Striping

13A-24-06 Loading Areas 9

13A-24-07 Accessible Parking Spaces Requirements for Persons with Disabilities 9

13A-24-08 Parking Space Requirements 10
A. Specific Requirements for Each Land Use
B. Table of Parking Requirements by Land Use Category

13A-24-09 Parking Structure Design Standards 13
A. Setbacks
B. Maximum Height
C. Parking Stall Size Requirements
D. Parking Structure Appearance Requirements
E. Landscaping

13A-24-10 Parking Stall Dimensions 14

13A-24-11 City Approval of Access Required 15

13A-24-12 Traffic Impact Analysis 16

13A-24-13 Access – Ingress and Egress 16
A. Ingress and Egress
B. Paved Access
C. Entry/Guardhouse Gateways
D. Unobstructed Access

13A-24-14 Access and Maneuvering for Fire and Refuse Trucks 16

13A-24-15 Driveway Access – General Standards 17
A. Determination of Necessity
B. Width of Curb Openings
C. Number of Curb Openings
D. Reciprocal/Shared Access
E. Single Family Residential

13A-24-16 Driveway Separations 17
A. Frontage on Arterial (106'+) or Major Collector Streets (80'+)
B. Frontage on Minor Collector (66') or Local Streets (50'+)
C. Driveways Adjacent to Intersections
D. Deviations to Driveway Separation

13A-24-17 Driveways – Widths and Curb Designs – Nonsingle Family Residential Developments 19
A. One Way
B. Two Way
C. Drive Approaches

13A-24-18 Unused or Abandoned Drive Approaches 20

13A-24-19 Improvements in Public Right-of-Way 21
A. Minimum Design Vehicle
B. Sight Obstruction

13A-24-20 Pedestrian and Bicycle Access and Circulation Standards 21
A. Purpose
B. Pedestrian and Bicycle Accessibility

C. Pathway Safety, Comfort, and Convenience
D. Design and Construction Standards for Pathways and Access Ways
E. Shade on Long Access Ways and Pathways
F. Bicycle Parking

Chapter 13A-24 – PARKING, ACCESS AND CIRCULATION REQUIREMENTS

13A-24-01 Purpose

These regulations are established to reduce street congestion and traffic hazards in the City by incorporating adequate, attractively designed facilities for off-street parking as an integral part of every use of land in the City. These regulations are intended to complement any performance standards relating to development of parking lots as may be contained in other chapters of this Code.

This Chapter also provides for vehicle ingress and egress, internal circulation, reciprocal access, and transportation demand management options within developments. Vehicular access and circulation must be properly designed so that the City street system will be able to accommodate traffic at an acceptable level of service. Thus, this Chapter is intended to balance the right of reasonable access to private property with safe and efficient travel.

Streets have been categorized by the City by function and classified for access purposes based upon their level of importance and function. Regulations have been applied to these roadways for the purpose of mitigating traffic demand and reducing traffic accidents, personal injury, and property damage attributable to access systems, and to thereby improve the safety and operation of the street network. These regulations further the orderly use of land, protect community character, provide universal pedestrian and bicycle access, and conserve natural resources by promoting well designed road and access systems.

13A-24-02 General Provisions

A. **General**

1. Minimum off-street parking space with adequate provision for ingress and egress by standard-sized vehicles shall be provided at the time of erection of any main building or at the time any main building is enlarged or increased in capacity. Provided, however, those homes existing or constructed prior to ~~January 1, 2011~~ July 1, 2012, shall be exempt from the requirement to enlarge their garage to meet the present standard.

2. Parking areas shall be considered during the design process since they represent a three-dimensional appearance when occupied. Parking shall be designed as ~~outdoor rooms promoting maintenance and ownership~~ attractive and functional spaces.

B. **Parking Space Size**

1. All parallel parking spaces shall be a minimum of 9 feet wide by 22 feet long as designated on the diagram in this Chapter.

2. All parking spaces (not including parallel spaces) shall be a minimum of 9 feet wide by 20 feet long as designated on the diagram in this Chapter.

3. Parking spaces (not including parallel spaces) may be reduced to 18 feet in depth based upon the following exceptions:

   a. Where vehicles overhang landscape areas that are at least 15 feet wide along street frontages; or,

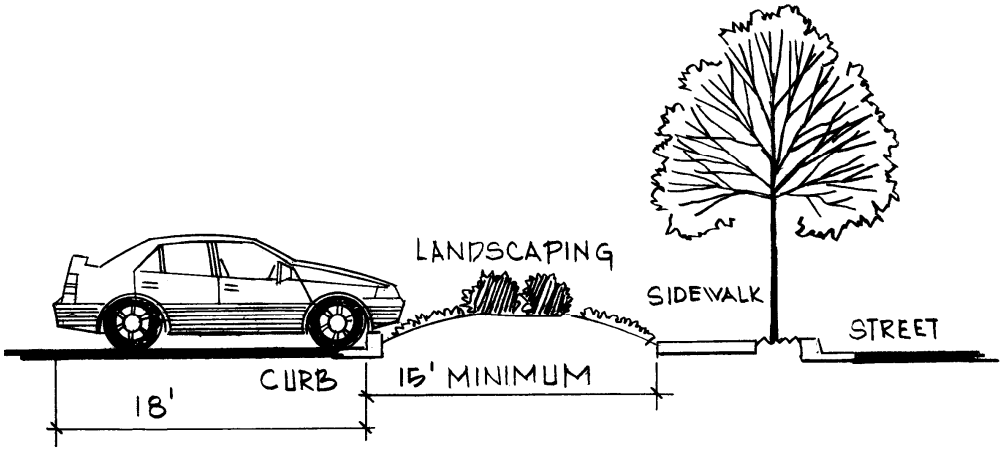

Chapter 24 - Figure 1 – Reduction for Landscape Buffer

   b. Where vehicles overhang landscape areas that are at least 5 feet wide along a side or rear property lines or adjacent to an interior parking lot landscape area that is at least 10 feet wide (for double loaded parking); or

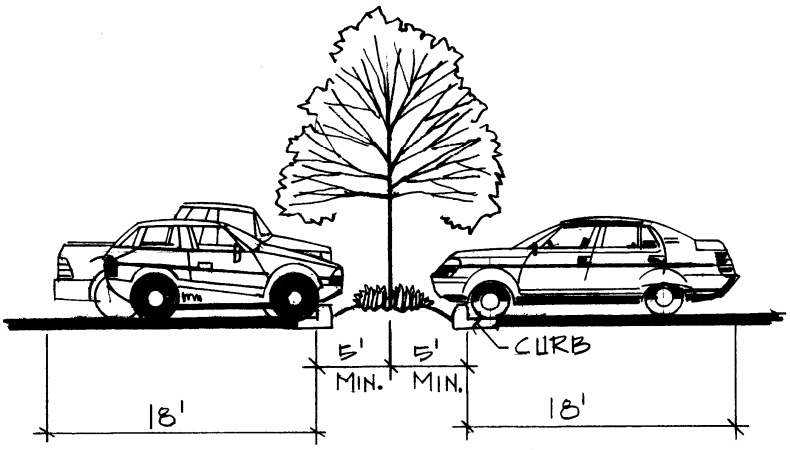

Chapter 24 - Figure 2 - Reduction for Planter Overhangs

c. Where vehicles overhang a sidewalk on a single side on private property where the sidewalk is at least 6 feet in width and complies with all applicable codes and standards; or

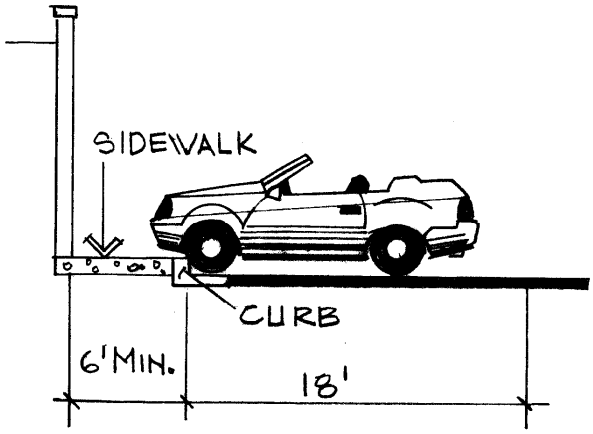

Chapter 24 - Figure 3 - Reduction for Sidewalk Overhang

d. Where parking within a parking structure is used for general office use only.

e. The minimum garage size for residential development shall be as follows:

Type of Garage	Minimum Width	Minimum Depth	Minimum Square Footage
Single	12 feet	20 feet	240 square feet
Double	20 feet	20 feet	400 square feet
Triple	30 feet	20 feet	600 square feet

C. **Floor Area Defined.** For the purposes of parking requirements, floor area shall be defined as the gross square footage of the building.

D. **Compact Parking Stall Requirements.** A reduction of the required parking spaces to 8 feet by 16 feet in size may be allowed for up to a maximum of 15% of total required parking spaces at the discretion of the Director for the accommodation of compact-sized cars. Back up and maneuvering space may be reduced accordingly, subject to approval of the Director. All compact parking stalls shall be clearly marked.

13A-24-03 Special Access and Parking Provisions

A. **Alternative to On-Site Parking**

1. **Off-Site Parking.** Off-site parking may be allowed for the required parking of any new commercial use~~,~~ or structure~~, or building in any commercial district~~ that cannot be provided on the premises due to the property's size or location according to the following criteria:

   a. The off-site parking must be located on other appropriately zoned property.

   b. The off-site parking cannot be more than 300 feet of walking distance from the nearest point of the parcel.

   c. The adjacent site has excess parking that is not required for their use, or the hours parking is needed will not conflict with the hours of use on the adjacent property.

   d. The applicant shall provide a document to the Community Development Department, signed by the owners of the alternate site and recorded at the Salt Lake County Recorder's Office, that stipulates the permanent reservation of use of the site for said parking.

2. **Temporary Off-Site Event Parking.** Temporary off-site parking for events may be allowed after review and approval of a parking and access management plan by the Director. Temporary parking is parking established for a fixed period of time with the intent to discontinue such parking upon the expiration of the time period. An occasional event with an expected attendance of less than 500 persons or if the event does not occur more than once a year shall not be subject to the requirements of this Section.

   The applicant will be responsible to make provisions for on- and off-site parking, safe pedestrian routes to and from the off-site parking, transportation to and from off-site parking locations beyond a 5,000 foot (approximately 15 minutes) walking route, entry and exiting methods, temporary or permanent traffic control methods, and restricting parking in identified areas.

   The parking and access management plan must be approved prior to the issuance of a temporary use permit, business license, or certificate of occupancy required for the event, project, or use. Upon approval, the parking and access management plan shall be available for public inspection. All approved updates of a parking and access management plan shall be available for public inspection.

B. **Parking Requirements Increase/Decrease**

1. In cases where parking, other than herein required, may be appropriate, the Planning Commission may increase or decrease requirements based upon actual usage by employees and customers, but in no case shall the requirements be increased or decreased by more than 25%.

2. In cases where parking, other than herein required, may be appropriate, the Planning Commission may increase requirements based upon meeting the requirement of one tree above the minimum required under applicable development code for every additional five spaces,

beginning with the first additional space and each five spaces thereafter, but in no case shall requirements be increased by more than 25%.

3. At the time of site plan review, a parking plan shall be submitted showing all parking spaces, the overall circulation system, an analysis of the parking demand for the specific land uses proposed, and other justification as necessary for requesting reductions in parking space requirements.

4. Developments may be underparked upon the review and approval of the Planning Commission if justified with a walkable design that demonstrates such and/or where local multimodal transit systems exist or are immediately planned that would help reduce the number of needed parking stalls and automobile trips.

C. **Shared Parking**

1. **Shared Parking Proposal.** Notwithstanding any other parking requirements provided in this Chapter, when land uses occupy the same lot or adjacent lots, the total number of off-street parking spaces required for each use may be combined and shared. A proposal for sharing off-street parking shall be presented to the Director. If the proposal involves the accommodation of more than 10 parking spaces (total accumulated spaces required for all involved uses), the Director may present the proposal to the Planning Commission for site plan review.

2. **Requirements.** In order to qualify for shared parking, applicants shall present the following:

   a. The location and identity of each use that will share the facility.

   b. The total parking requirement for each use.

   c. The projected hours of operation of each use and the house during which the peak parking demand will be experienced.

   d. The number of existing and/or proposed parking spaces.

   e. A site plan that provides for a distance of no greater than 500 feet from the nearest entrance of each use to the nearest edge of the parking facility.

   f. A site plan that demonstrates that the proposed shared parking facility will comply with all standards required by this Code for parking lot development.

D. **Drive-Thru Business Stacking Space.** (See Commercial, Office, Industrial, and Transit Corridor Development Standards chapter)

E. **Excessive Parking.** Developments shall not have parking in excess of that required by this Code without prior approval of the Director upon written justification of the specific need for more parking spaces than the provisions of this Code allows. In addition, developers are encouraged to work out shared parking agreements with adjacent users wherever possible according to the provisions for shared parking contained within this Code.

F. **Prohibited Parking.** No parking shall occur in any alley, driveway, service driveway, traffic aisle (either public or ways open to the public), delivery area (other than for a minimal period of time

needed for the delivery of goods and materials to a specific tenant) or other location designed for through traffic unless:

1. Said area has been specifically designated for parking on the original approved site plan; or

2. The original site plan has been specifically modified by written approval of the Director ~~City Engineer~~ for parking space use; and

3. Be designed in accordance with the parking designs specified in this Chapter.

13A-24-04 Residential Parking Requirements and Restrictions

A. **Vehicles, Recreational Vehicles, and Trailers Must Be Parked Upon a Hard Surface.** All areas utilized for the parking of vehicles, recreational vehicles, and trailers shall be paved with a hard surface, e.g., concrete, asphalt, brick, or other hard surface approved by the Director. This includes the front yard, side yard, and rear yard of the home. It is prohibited to park upon areas that have been landscaped or are reserved for future landscaping.

Exceptions: Single family residential properties with animal rights will be allowed to store animal transport trailers. These trailers are not required to be parked on a gravel or hard surface but must be parked within the rear setback of the home.

B. **Maximum Area.** The maximum area of hard surface for the purpose of parking vehicles on a residential lot shall be restricted to not more than 20% of the front yard excluding the driveway providing access to the primary attached or detached garage, 35% of the rear yard, and one of the two side yards associated with the lot. Exception: The maximum area of hard surface allowed for residential lots with circular driveways shall be determined on a case by case basis.

~~C. **License and Registration Requirement for Vehicles Parked/Stored Outside.** All vehicles that are parked or stored outside shall have a current license and registration sticker as required by the State of Utah Department of Motor Vehicles. Vehicles lacking proof of registration and posting of a current registration sticker are deemed a "junk vehicle" and subject to penalties and enforcement as prescribed by law.~~

~~D.~~ **Carports, Vehicle Covers.** All structures attached to the dwelling for the purpose of protecting or otherwise covering vehicles shall comply with applicable building codes for the structure and with existing zoning regulations for minimum distance between main dwelling structures and side property lines. Detached carports are required to meet the minimum standards for an accessory structure and adopted applicable building codes. Where vehicle covers are used, covers shall be approved manufactured covers. ~~Earth tone colors are encouraged (beige or brown tones) for vehicle covers.~~

E. **Parking of Recreational Vehicles**

1. **Parking Location Restrictions.** Recreational vehicles parked or stored at a residence must be located within the rear or side yard of the home. Such vehicles may only be parked or stored within the front yard of a home if it is physically impossible due to natural topography or property boundaries to locate a recreational vehicle within the rear or side yard of a home.

2. **Restricted Parking Area.** No recreational vehicle shall park or extend within a restricted parking area. The restricted parking area is defined as follows:

   a. **Interior Lots (noncorner lots).** The street right-of-way, which includes the back edge of sidewalk (edge closest to the home, a minimum of 5 feet), or any area in which parking or storing of a recreational vehicle would create a traffic visibility hazard.

   b. **Corner Lots.** Both frontages shall comply with those standards outlined for interior lots, and nothing shall be parked that intrudes into the corner sight visibility triangle as defined by this Code.

3. **Prohibited Parking Locations.** Recreational vehicles shall not be parked or stored within the street right-of-way.

4. **Number of Recreational Vehicles Permitted.** One recreational vehicle per dwelling. The vehicle may be parked within the front yard and then only when a side or rear yard location is not available. ~~All recreational vehicles parked or stored on a residential lot must be owned or apportioned by an occupant who resides at the residence.~~

F. **Parking of Commercial Vehicles**

1. **Parking Location Restrictions.** Commercial vehicles parked or stored at a residence must be located within the rear or side yard of the home. Such vehicles may only park within the front yard of a home if it is physically impossible due to natural topography or property boundaries to locate a commercial vehicle within the rear or side yard of the home.

2. **Restricted Parking Area.** No commercial vehicle shall park or extend within the restricted parking area. The restricted parking area is defined as follows:

   a. **Interior Lots (noncorner lots)**

      (1) Any area in which parking or storing of the commercial vehicle would create a traffic visibility hazard.

      (2) Commercial vehicles less than 24 feet in length and less than 8 feet in height may not be closer than 10 feet from the back edge of the sidewalk (edge closest to the home) or the public right-of-way.

      (3) Commercial vehicles between 8 feet and 10 feet in height and less than 30 feet in length shall be parked in the side yard or rear yard.

      (4) Commercial vehicles over 10 feet in height or more than 30 feet in length shall not be parked on a residential lot.

      (5) Semi-tractors, trailers, or trucks shall not be parked on a residential lot.

   b. **Corner Lots.** Both frontages shall comply with those standards outlined for parking or storage of commercial vehicles on interior lots, and nothing shall intrude into the corner site visibility triangle as defined by this Code.

c. **Prohibited Parking Locations.** Commercial vehicles shall not be parked or stored within the street right-of-way.

d. **Number of Commercial Vehicles Permitted.** Only one such vehicle may be parked on a residential lot. A commercial vehicle parked or stored on a residential lot must be owned or apportioned by an occupant who resides at the residence.

e. **Storage of Commercial Vehicles.** The storage of any commercial vehicles for a period exceeding 72 hours is prohibited except for a bona fide temporary absence of the owner.

G. **Enforcement.** The authority to enforce the provisions of this Section shall be vested in the Police Department and with the Community Development Department.

13A-24-05 Parking Lots – Design Criteria

A. **On-Site Parking Required.** All required parking shall be provided on site unless otherwise allowed by other provisions in this Chapter.

B. **Parking Consolidation**

1. Parking facilities need not be located in one consolidated area of a particular site but may be separated by landscaping or building elements for reasonable safe pedestrian access to the building. However, all parking must be conveniently located to the entrances to all buildings.

2. Location of parking shall be determined not only from its visual relationship to a building and site but also as it relates to safe and convenient pedestrian and vehicular circulation patterns. Location may also be determined by the relationship and location of customer parking, employee parking, service area parking, vehicular display areas, and circulation patterns thereto on adjoining properties. Combined entrance, access, circulation, service, loading, and parking areas may be required.

C. **Reciprocal Access**

1. Reciprocal access shall be designed into all commercial developments. Some cases may exist where grading differences or building locations make reciprocal access between developments impractical.

2. When a development is built in phases, each phase shall include the minimum number of parking stalls, necessary driveways, and access points required for the uses proposed in that phase of construction.

D. **Minimum Parking Backout.** The minimum depth of a parking space backout area for all parking lots designed with 90 degree parking, whether designed for single or double loaded parking, shall be a minimum of 24 feet.

E. **Curb.** The perimeter of all paved surfaces shall be finished with 6 inch high concrete curbing with handicap ramps, where necessary.

F. **Parking Lot Surface.** Every parcel of land used as a parking or storage area shall be paved with ~~impervious~~ asphalt, brick, or concrete surfacing and shall be arranged and striped to provide orderly and safe loading, unloading, parking, and storage of vehicles.

G. **Deviations to Surfacing Materials.** The City Engineer and Director shall review and may approve or deny other types of surfacing materials.

H. **Striping.** Parking lot striping shall be maintained on a regular basis so that striping is visible for the safe ingress/egress and parking of vehicles.

13A-24-06 Loading Areas

Loading and refuse collection areas shall not be permitted between buildings and streets. Loading areas and refuse collection areas shall not face toward any street and must be screened from view of public and private streets and rights-of-way.

A. Streets shall not be used directly for loading, unloading, or refuse collection.

B. Buildings and improvements upon lots must be designed to properly accommodate loading, unloading, and refuse collection.

C. At least one off-street loading space shall be provided and maintained on the same lot with every building or part thereof having a gross floor area of 10,000 square feet or more, that is to be occupied by a commercial or industrial use, to or from which delivery of materials or merchandise are regularly made by a motor vehicle.

D. Off-street loading spaces may not block use of required parking space areas of site or adjacent sites.

E. Loading space shall be located no closer than 30 feet from the edge of the dock to any residential district and shall be located in the side or rear yard.

F. All loading and unloading shall be performed on the site. Such on-site loading areas shall be in addition to required off-street parking and shall not be located within driveways.

G. Each loading area shall be not less than 12 feet wide, 25 feet long, and if enclosed or covered, 14 feet high. Adequate turning and maneuvering space must be provided on the site.

H. Loading/unloading and refuse collection activities shall follow hours specifically noted in the applicable noise ordinance.

13A-24-07 Accessible Parking Spaces Requirements for Persons with Disabilities

A. Accessible parking and passenger loading facilities for residential and commercial uses shall comply with applicable laws, rules and regulations.

B. Accessible parking spaces required by this Section may be counted towards the fulfillment of the general on-site parking requirements of this Chapter.

13A-24-08 Parking Space Requirements

A. **Specific Requirement for Each Land Use.** Off-street parking shall be provided for land uses as described below. Requirements based upon floor area shall be calculated as defined above. Parking for uses not specifically listed below shall be provided in the same ratio as the use most nearly approximating the characteristics of the unlisted use, as determined by the Planning Commission for nonadministrative conditional uses and the Director for permitted and administrative conditional uses. Land uses are grouped into categories that have comparable parking requirements.

B. **Table of Parking Requirements by Land Use Category**

Residential Land Use Categories	Space Requirements
Dwelling, Single Family	2 spaces per dwelling unit (within an enclosed garage)
Dwelling, Duplex	2 spaces per dwelling unit
Dwelling, Multiple Unit (tri-plex, four-plex, and five-plex	2 spaces per dwelling unit
Dwelling, Multiple-Unit (Apartments)	
- one bedroom unit	1.5 spaces per unit
- two bedroom unit	2.0 spaces per unit
- three or more bedroom unit	2.5 spaces per unit
- guest parking	0.25 spaces per unit
	NOTE: There shall be no less than 1.5 covered parking spaces (1.0 carports, 0.5 garages) per unit.
Assisted Living Center, Nursing Home, Convalescent Home and other similar uses as determined by the Planning Commission upon review.	0.5 spaces per bed, plus 10% for support staff/physicians, plus a bus only parking stall to meet the dimensions of a handicap parking stall.
Senior or Elderly Housing	1 space per unit (The completed parking ratio may be reduced to one space per unit for any congregate care facility, provided that adequate space is created and landscaped that can be converted to additional parking stalls to comply with the minimum standards as set forth for Planned Unit Developments. The area that is held in reserve for additional parking shall not be located within a required landscape setback area and shall not be used in the calculations for any required landscaping or open space coverage percentage.)

Retail Commercial Land Use Categories	Space Requirements
Automotive Repair (service bays are not included in the required number of required parking spaces)	5 spaces per 1,000 square footage of floor area
Commercial Retail Sales and Services **	5 spaces per 1,000 square footage of floor area
Heavy Commercial	5 spaces per 1,000 square footage of floor area
Commercial Center, Community	5 spaces per 1,000 square footage of floor area
Commercial Center, Convenience	5 spaces per 1,000 square footage of floor area
Commercial Center, Neighborhood	5 spaces per 1,000 square footage of floor area
Commercial Center, Regional	5 spaces per 1,000 square footage of floor area
Liquor Sales	5 spaces per 1,000 square footage of floor area
Exceptions: ** Reduction may be allowed by the Planning Commission for retail businesses and shopping centers over 80,000 square feet	

Commercial Services, Offices Land Use Categories	Space Requirements
Bar, Tavern, Club	3.5 spaces per 1,000 square footage of floor area
Business or Financial Services	4.0 spaces per 1,000 square footage of floor area
Dance Hall, Discotheque	3.5 spaces per 1,000 square footage of floor area
Day Care, Group	1 space for each instructor (plus drop-off space)
Veterinary Office	4 spaces for each practitioner
Medical and Health Care	5 spaces per 1,000 square footage OR 4 spaces for each practitioner plus 1 space per employee (including practitioner) at highest shift, whichever is greater. For the purpose of the parking ratio, employees include nursing staff, receptionist, rehabilitation specialists, and dental assistants. Site plan shall be reviewed to verify compliance with this standard upon application of business license. Business license shall be denied if adequate parking is not provided.
Motel, Hotel	1 space per rental unit; 1 space for each 200 square footage of floor area of assembly, conference space, banquet, sit-down restaurant facility, and office space.

Recreation, Indoor Land Use Categories	Space Requirements
Bowling Center	5 spaces per lane
Movie Theater	1 space per 4 seats
Skating Rink	3 spaces per 1,000 square footage of floor area of skating area

Restaurants Land Use Categories	Space Requirements
Restaurant – Sit down	10 spaces per 1,000 square footage of floor area
Restaurant – Drive-in/Drive-thru (all fast food outlets with large proportion of take-out and/or drive-in service)	10 spaces per 1,000 square footage of floor area. Required parking spaces do not include spaces required in drive-thru lanes.

Public Uses Land Use Categories	Space Requirements
Hospital	2 spaces per bed
Rehabilitation Center	.5 space per bed
Elementary and Middle School (public or private)	1 space per teacher and staff, plus 1 space per 2 classrooms
Senior High School (public or private)	1 space per teacher and staff, plus 1 space per 5 nonbussed students.
Religious or Cultural Activity	1 space per 4 seats
Theater or Concert Hall	1 space per 4 seats

Industry Land Use Categories	Space Requirements
Industry, Light & Medium	1 space per 1,000 square footage of floor area
Warehouse, Wholesale, Storage	1 space per 1,000 square footage of floor area

Special Review Land Use Categories	Space Requirements
Athletic, Tennis or Health Centers	Specific off-street parking shall be determined by the Planning Commission.
Auto, Truck, RV, and Equipment Sales and Storage	Specific off-street parking shall be determined by the Planning Commission.
Cemetery, Columbarium Mausoleum	Specific off-street parking shall be determined by the Planning Commission.
Golf Course	Specific off-street parking shall be determined by the Planning Commission
Park (active and passive)	Specific off-street parking shall be determined by the Planning Commission
Recreation Center	Specific off-street parking shall be determined by the Planning Commission.
Recreation, Outdoor	Specific off-street parking shall be determined by the Planning Commission.

13A-24-09 Parking Structure Design Standards

A. **Setbacks.** The parking structure shall comply with the minimum requirements including all height adjustments for stepped buildings.

B. **Maximum Height.** The parking structure shall comply with all height requirements including the stepping back of the additional stories above grade.

C. **Parking Stall Size Requirements**

1. **Retail/Hotel Projects.** Retail/hotel developments are characterized by constant traffic flow and parking space ingress/egress, and generally have a higher daily traffic count than a single/multiple user office building development. Because of such, all parking stalls shall conform to the minimum parking stall design standards. There shall be no reduction in the minimum parking stall depth for a parking structure constructed for a retail or hotel land use.

2. **Office Building Project.** Office building developments are characterized by nonconstant traffic flow and parking space ingress/egress, and generally have two time periods of activity. The balance of the day is characterized by a very low activity level, and evening hours are normally not occupied. Because of such, the minimum parking stall depth for 90 degree parking may be reduced from 20 feet to 18 feet upon review and approval by the Planning Commission. The minimum travel aisle way shall not be reduced in any circumstance. All other parking stall dimensions for angled parking, including stall width and depth, shall not be reduced.

3. **Multiple Uses.** A project that includes multiple uses in addition to office shall require the higher standard.

D. **Parking Structure Appearance Requirements.** Parking structures shall be designed to complement adjacent nonparking structures and blend in with the local man-made or natural environment. If adjacent to an existing or future office building and the facility is adjacent to a right-of-way, the parking structure shall be designed to appear as an office building with simulated window openings and doors, unless otherwise approved by the Planning Commission. Exterior elements shall ~~use at least one of the following materials: embossed concrete, polished masonry,~~

~~colored glass, and/or brick. Stucco shall not cover more than 20% of the hard vertical surface area. Stucco may only be used if approved by the Planning Commission after determination that the material blends with the adjacent man-made or natural environment and is used in an architecturally pleasing manner, e.g., quoins, pediments, etc.~~ follow all applicable standards listed in the Architectural Design Standards adopted by the City

E. **Landscaping.** The parking structure shall be landscaped at the base of the facility with trees and shrubs, along with other materials that will de-emphasize the use of the facility as a parking structure. It is strongly encouraged, but not required, to landscape the top level with trees, grass, and other pedestrian friendly elements.

13A-24-10 Parking Stall Dimensions

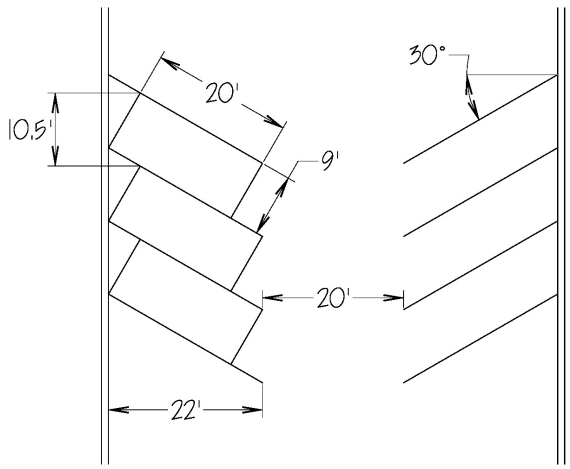

Chapter 24 - Figure 4 - 30 Degree Angle Parking

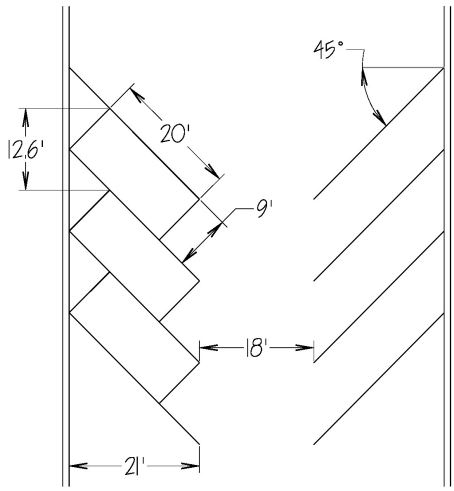

Chapter 24 - Figure 5 - 45 Degree Angle Parking

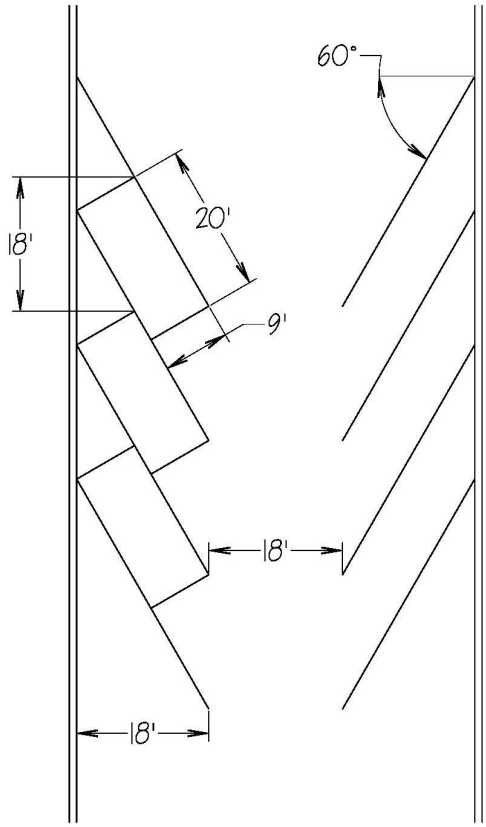

Chapter 24 - Figure 6 – 60 Degree Angle Parking

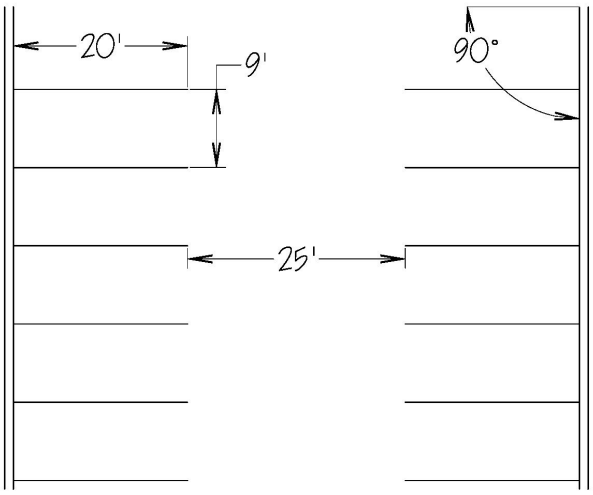

Chapter 24 - Figure 7 - 90 Degree Angle Parking

13A-24-11 City Approval of Access Required

Access to a public street requires approval by the Director based on the standards contained in this Code and applicable standards.

13A-24-12 Traffic Impact Analysis

The City may require a traffic impact analysis prepared by a registered engineer to determine access, circulation, transportation demand management, and other reasonable transportation system mitigation requirements.

13A-24-13 Access - Ingress and Egress

A. **Ingress and Egress.** All parking areas shall be designed to provide ingress and egress from a public street by forward motion of the vehicle. Single family developments are exempt from this requirement.

B. **Paved Access.** All off-street parking areas shall have access to a public street by means of a paved driveway that extends no less than 15 feet from the public right-of-way to the nearest parking area and/or driveway access to parking spaces. No parking space shall be located within the first 15 feet of a driveway. Single family developments are exempt from this requirement.

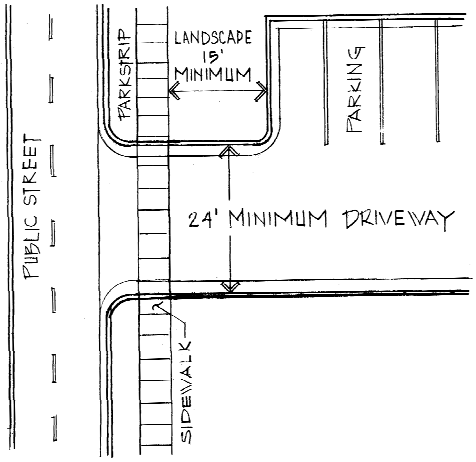

Chapter 24 - Figure 8 – Minimum Setback for Ingress and Egress

C. **Entry/Guardhouse Gateways.** Where an entry gate or guardhouse controls vehicle access or egress, a stacking lane shall be provided as required by the City Engineer. The stacking lane shall not interfere with maneuvering, traffic flow of aisles, streets, bike paths, parking spaces and sidewalks.

D. **Unobstructed Access.** Unobstructed and direct driveways shall be provided from commercial off-street parking or loading facilities to a street or alley. Loading driveways may coincide with driveways to parking facilities.

13A-24-14 Access and Maneuvering for Fire and Refuse Trucks

Parking Lots shall include the necessary dimensions for the on-site maneuvering of refuse vehicles and fire trucks as determined by the City Engineer and applicable fire authority. A minimum 20 foot wide,

unobstructed driveway, lane, or other access way and turn-around may be required for this purpose. No off-site maneuvering is permitted.

13A-24-15 Driveway Access – General Standards

A. **Determination of Necessity.** In establishing permissible curb openings and sidewalk or driveway crossing for access to private property, such curb openings or driveways shall not be authorized where they are unnecessary or where they would interfere with the movement of vehicular traffic, with public improvements, or with the rights of the public in the adjacent street or alley. In no case shall any curb opening be of greater width than necessary for reasonable access to the property to be served.

B. **Width of Curb Openings.** In determining the width of curb openings and spacing of driveways, the end transitions in each case will not be considered a part of the width of the curb opening. The curb opening or width of each driveway shall be defined as the throat width of the driveway at the inside point of the curb transition radius at the top face of the curb.

C. **Number of Curb Openings.** Only one driveway opening per street frontage/per parcel shall be allowed unless a capacity or safety need for more than one driveway opening can be demonstrated to the City Transportation Engineer. This may be determined on a case-by-case basis.

D. **Reciprocal/Shared Access.** Where nonresidential uses share a property line, off-street parking lots serving the properties shall be made accessible to each other unless grade differences or building locations make reciprocal access between developments impractical.

E. **Single Family Residential**. Minimum separation from driveways, measured from edge of driveway to edge of driveway at back of sidewalk is 30 feet for multiple drive approaches along the same parcel.

13A-24-16 Driveway Separations

A. **Frontage on Arterial (106 feet +) or Major Collector (80 feet +) Streets.** Uses, other than single family dwellings, on parcels with less than 150 feet of frontage shall be required to share a common driveway in order to assure that a minimum of 170 feet of continuous curb and gutter exists from the throat of one driveway to the throat of the next adjacent driveway. Driveways offset less than 170 feet from existing driveways, approved driveways, or existing public streets on the opposite side of the street shall not be allowed unless the City Engineer determines that an unacceptable capacity or safety impact will not result.

B. **Frontage on Minor Collector (66 feet) or Local (50 feet +) Streets.** Uses with less than 70 feet of frontage shall be required to share a common driveway in order to assure that a minimum of 90 feet of continuous curb and gutter exists from the throat of one driveway to the throat of the next adjacent driveway. Driveways offset less than 170 feet from existing or approved driveways on the opposite side of the street shall not be allowed unless the City Engineer determines that an unacceptable capacity or safety impact will not result. Single family developments are exempt from this requirement.

C. **Driveways Adjacent to Intersections.** The minimum distance from the intersection to the nearest driveway shall be according to the following intersection illustration and distance table. (Distances are measured from the back of curb to the throat of the nearest edge of the driveway.)

	Median Barrier Present	Arterial	Major Collector	Minor Collector
Driveway Clearance	NO	200 feet	175 feet	50 feet
Driveway Clearance	YES	185 feet	115 feet	50 feet

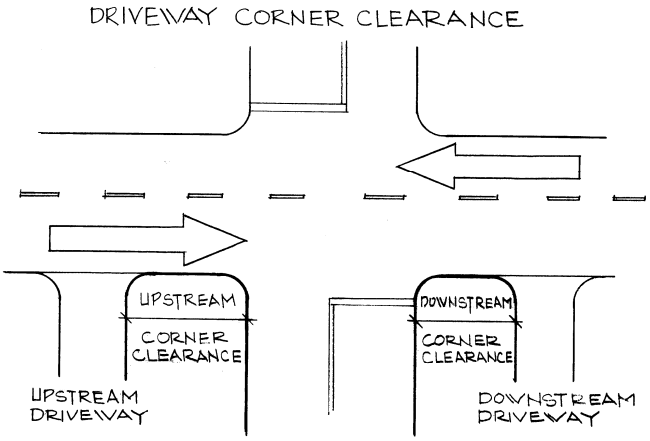

Chapter 24 - Figure 9 – Driveway Corner Clearance

D. **Deviations to Driveway Separation.** The City Engineer shall review and may approve or deny deviations to the above standards based upon a site visit and review of items including, but not limited to:

1. Safety.
2. Alternative access points and potential for reciprocal/shared access.
3. Sight lines.
4. Impact on traffic flow.

13A-24-17 Driveways – Widths and Curb Designs – Nonsingle Family Residential Developments

A. **One Way**

1. One-way driveways shall be not less than 12 feet nor more than 24 feet in width. A wider one-way driveway may be required by applicable fire authority.

2. **Exception.** No two complementary one-way driveways may total more than 45 feet in width.

B. **Two Way**

1. Two-way driveway approaches shall be not less than 24 feet nor more than 36 feet in width. In determining the width of curb openings and spacing of driveways, the end transitions in each case will not be considered a part of the width of the curb opening.

2. Wherever a common driveway is constructed serving two or more properties, the common curb opening shall have a maximum width of 36 feet.

3. The City Transportation Engineer shall review and may approve or deny deviations to the above driveway width standards based upon review of the site and land use, along with impact on streets and neighbors.

C. **Drive Approaches.** All driveway approaches shall be constructed with curb radii and provide for handicap access.

1. **Minimum Curb Radius.** All drive approaches shall have a minimum end transition (curb radius) of 10 feet and a maximum of 30 feet. If the driveway is to be used for delivery truck traffic, the minimum curb radius shall be 25 feet.

2. **Driveways.** Driveways shall be located a minimum of 5 feet from the property line. This does not apply to property lines where a shared driveway is proposed.

3. **One-Way Paired Driveways.** Where a driveway is of the split, one-way paired directional type, there shall be a raised landscaped island of at least 5 feet in width between the two driveways. The size of the entrance shall have a minimum of 14 feet and a maximum of 16 feet. The exit lanes shall be a minimum of 12 feet and a maximum of 29 feet (combined).

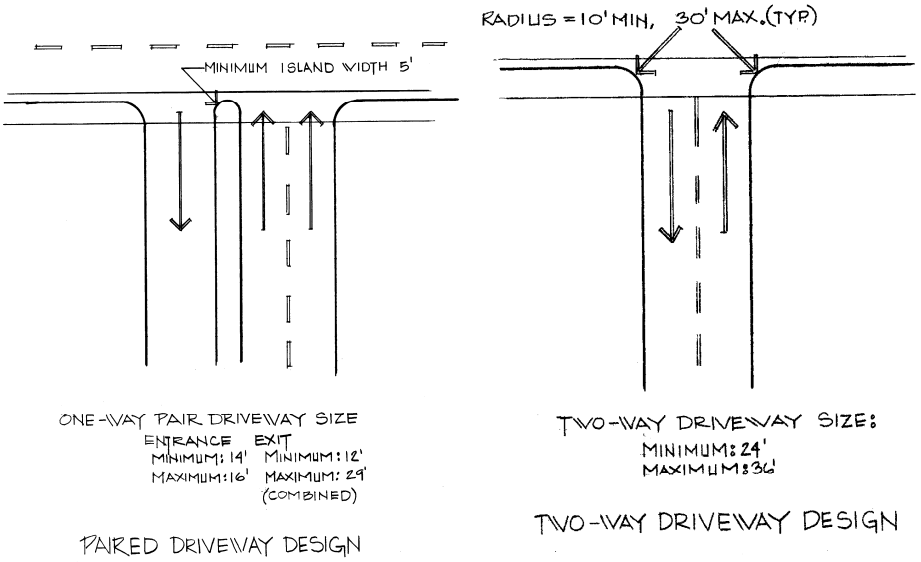

Chapter 24 - Figure 10 – Paired and 2-way Driveway Design

4. **Maximum Curb Opening Coverage.** The total width of all curb openings shall not exceed 40% of a project's frontage. For corner lots, the total width of all curb openings shall not exceed 30% of the combined frontages.

5. **Vehicle Encroachment.** No curb opening will be approved that allows vehicle encroachment on any portion of a street right-of-way for loading, unloading, or standing.

6. **Drainage.** Curb openings and driveways shall be paved and shall provide for adequate drainage.

7. **Drive Angle to Right-of-Way.** All driveways shall intersect the street at a 90 degree angle to a distance at least 15 feet from the property line.

13A-24-18 Unused or Abandoned Drive Approaches

A. Upon the issuance of a building permit, any unused or abandoned drive approaches or portions thereof shall be restored to the original curb section by the removal of the drive approach and replacement with high back curb and gutter to applicable City standards at the expense of the property owner adjoining that portion of the right-of-way.

B. Upon refusal or neglect of the property owner or agent to restore the unused or abandoned drive approach to its original high back curb and gutter section, the City may proceed to do such work and all expenditures so incurred shall be charged against the owner or agent.

13A-24-19 Improvements in Public Right-of-Way

A. Improvements in the public right-of-way shall be designed and constructed in conformance with applicable City standards, including but not limited to, the following:

1. **Minimum Design Vehicle.** The minimum design vehicle shall be the single unit truck.

2. **Sight Obstructions.** No object shall be situated to interfere with the required sight distance of intersections as set forth in the AASHTO specifications.

13A-24-20 Pedestrian and Bicycle Access and Circulation Standards

A. **Purpose.** The purpose of this Section is to provide transportation options and ensure that new pedestrian and bicycle facilities are designed to be attractive, safe, and convenient to use as well as ADA accessible and supportive of transit use.

B. **Pedestrian and Bicycle Accessibility.** All projects that are subject to the provisions of this Code shall provide for pedestrian and bicycle accessibility. Accessibility shall be from a direct, convenient, and attractive pathway system that conforms to the following standards:

1. **Continuous Pathways**. A pathway system shall extend through the development site and connect the street sidewalk to all primary building entrances as generally shown in Figure 11. The Director may require the developer to connect or stub pathway(s) to adjacent streets, private property, adjacent trails, plazas, future phases of development, and open space areas (when reciprocal access is available or can reasonably be provided).

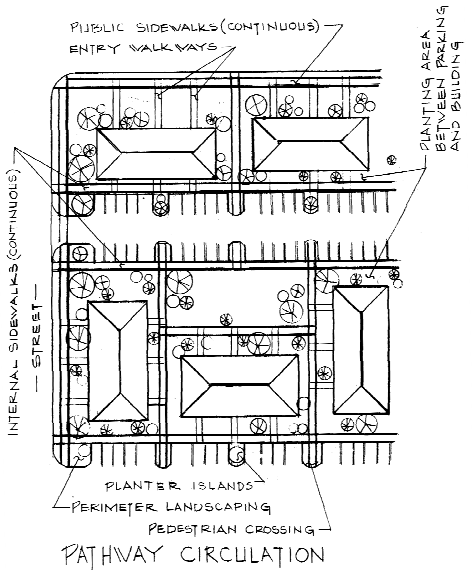

Chapter 24 - Figure 11 – Pathway Circulation

2. For the purpose of pedestrian safety, pathways through parking lots are encouraged to be raised on a 6-inch-high curb with the exception of areas crossing driveways.

C. **Pathway Safety, Comfort, and Convenience.** All portions of a development shall be accessible by a direct, convenient, attractive, safe, and comfortable system of pedestrian facilities as follows:

1. **Direct.** Pathways should not deviate unnecessarily from a direct route or involve a significant amount of out-of-direction travel.

2. **Safety, Comfort, and Accessibility.** Pathways should be free from hazards, have appropriate lighting levels, i.e., relative to the adjacent uses and considering natural surveillance, be suitable for people in wheelchairs, e.g., traction, not bumpy, etc., and/or people with visual impediments, and provide a reasonable route of travel between destinations. The pathway system shall comply with ADA requirements.

3. **Access to Primary Building Entrances and Parking Areas.** For commercial, industrial, mixed use, public, and institutional buildings, at least one pedestrian pathway is required to connect the public sidewalk to the primary entrance. A primary entrance is the main public building entrance. In the case where no public entrance exists, pathway connections shall be provided to the main employee entrance.

   For multifamily buildings and ground floor residential uses in mixed use buildings, the primary entrance is the front door facing the street except that multifamily buildings or courtyard housing in which each unit does not have its own exterior entrance facing a street, the primary entrance may be a lobby, courtyard, plaza, or breezeway that serves as a common entrance for more than one building.

4. **Pedestrian Amenities.** Pedestrian amenities such as benches, planters, trees, lighting, etc., are required along sidewalks and pathways to provide defensible space, crime prevention, pedestrian comfort, and accessibility.

D. **Design and Construction Standards for Pathways and Access Ways.** At a minimum, all pathways and access ways shall conform to the following standards:

1. **Vehicle Separation from Pathways and Access Ways.** Pathways and access ways adjacent to a driveway, street (public or private), or parking spaces are encouraged to be raised 6 inches and curbed, and be separated from the driveway/street by a buffer strip with a minimum width of 11 feet (combined landscaping and meandering walk), utilizing bollards, lighting, landscape berming, or other physical barriers. The ends of the raised portions must be constructed with accessible curb ramps.

2. **Housing Separation from Pathways and Access Ways.** Pedestrian pathways and access ways shall be separated a minimum of 10 feet from all residential living areas on the ground floor, except at building and courtyard entrances, to provide for privacy in living areas. Separation is measured from the pathway edge to the closest dwelling unit. The separation area shall be landscaped. Pathway building separation is not required for commercial, industrial, public, or institutional uses except as may be required through site plan review.

3. **Crosswalks.** Where pathways and access ways cross parking areas, driveways, or private streets, they shall be clearly marked in accordance with ADA standards. Continuous pedestrian pavement materials are encouraged across such areas.

4. **Surface Materials.** Pathway and access way surfaces shall be concrete and have a width that is based on their function. Pavers, brick and other ornamental paving may be used if it has a smooth finish. Textured or bumpy materials may be used as an edge treatment provided an accessible route is provided between the edge treatment. Multiuse paths, e.g., bicycles and pedestrians, shall be concrete or asphalt.

E. **Shade on Long Access Ways and Pathways**

1. When the primary entrance of a building is more than 100 feet from the nearest point of a public sidewalk, and the entrance is accessed by a pathway traversing a parking lot with more than 100 parking spaces, an overhead shade structure or tree canopy is encouraged along the pathway.

2. Shade elements may include opaque structures, e.g., arbors, pergolas, porticos, awnings, canopies, etc., and/or shade trees planted 25 feet on center or closer.

F. **Bicycle Parking**

1. All new non-residential construction, all new residential construction with a density of eight (8) or more dwelling units per acre, and remodels of the same uses of more than 50% (or expansions or intensification of use) shall provide bicycle parking.

2. The amount of bicycle parking required for new construction and/or remodels is determined by multiplying the total number of automobile parking spaces required by .05 (5%). If the calculation returns a number less than .5 (or one half of a parking space), the installation of bicycle parking is optional. In all other cases the calculated amount is rounded to the nearest whole number.

3. Bicycle parking is only useful to cyclists if it is located properly. Accordingly, bicycle parking shall be located:

   a. On the same lot as the principal use;
   b. to prevent damage to bicycles by cars;
   c. in a convenient, highly visible, active, well-lighted area;
   d. so as not to interfere with pedestrian movements;
   e. as near the principal entrance of the building as practical; and
   f. to provide safe access from the parking spaces to the right-of-way or bicycle lane.

4. Both employees and customers shall be considered when determining locations for bicycle parking. For example, a bike rack located within a parking structure may work for employees but would not work well for customers who would normally access the business from an exterior entrance. A highly visible location is determined from the vantage point of someone inside the building or near the principal pedestrian entrance. Locating bicycle parking under a building overhang, or in another way providing a degree of protection from the weather, will greatly improve its convenience.

5. Appropriate parking facilities include bike racks which allow the bicycle to be supported upright by its frame in two places and should allow the frame and one or both wheels to be secured. For long term employee parking, bike lockers are encouraged. Bicycle parking facilities shall be:

a. consistent with the surrounding in color and design and incorporated, whenever possible, into buildings or street furniture design;
b. designed to allow each bicycle to be supported by its frame;
c. designed to allow the frame and wheels of each bicycle to be secured against theft;
d. designed to avoid damage to the bicycles;
e. anchored the resist rust or corrosion, or removal by vandalism; and
f. designed to accommodate a range of bicycle shapes and sizes and facilitate easy locking without interfering with adjacent bicycles.

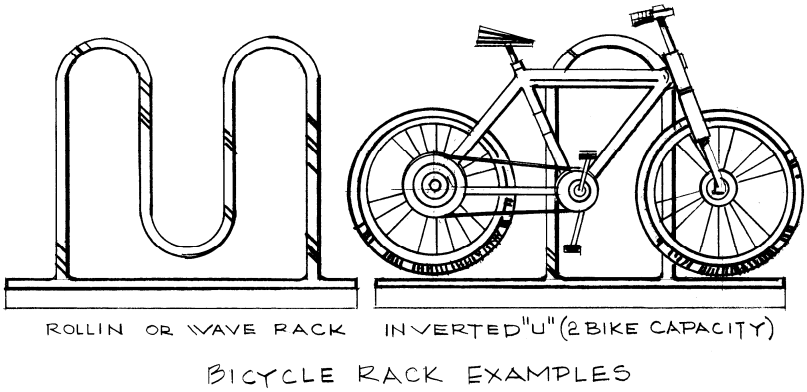

Chapter 24 – Figure 13 – Bicycle Rack Examples